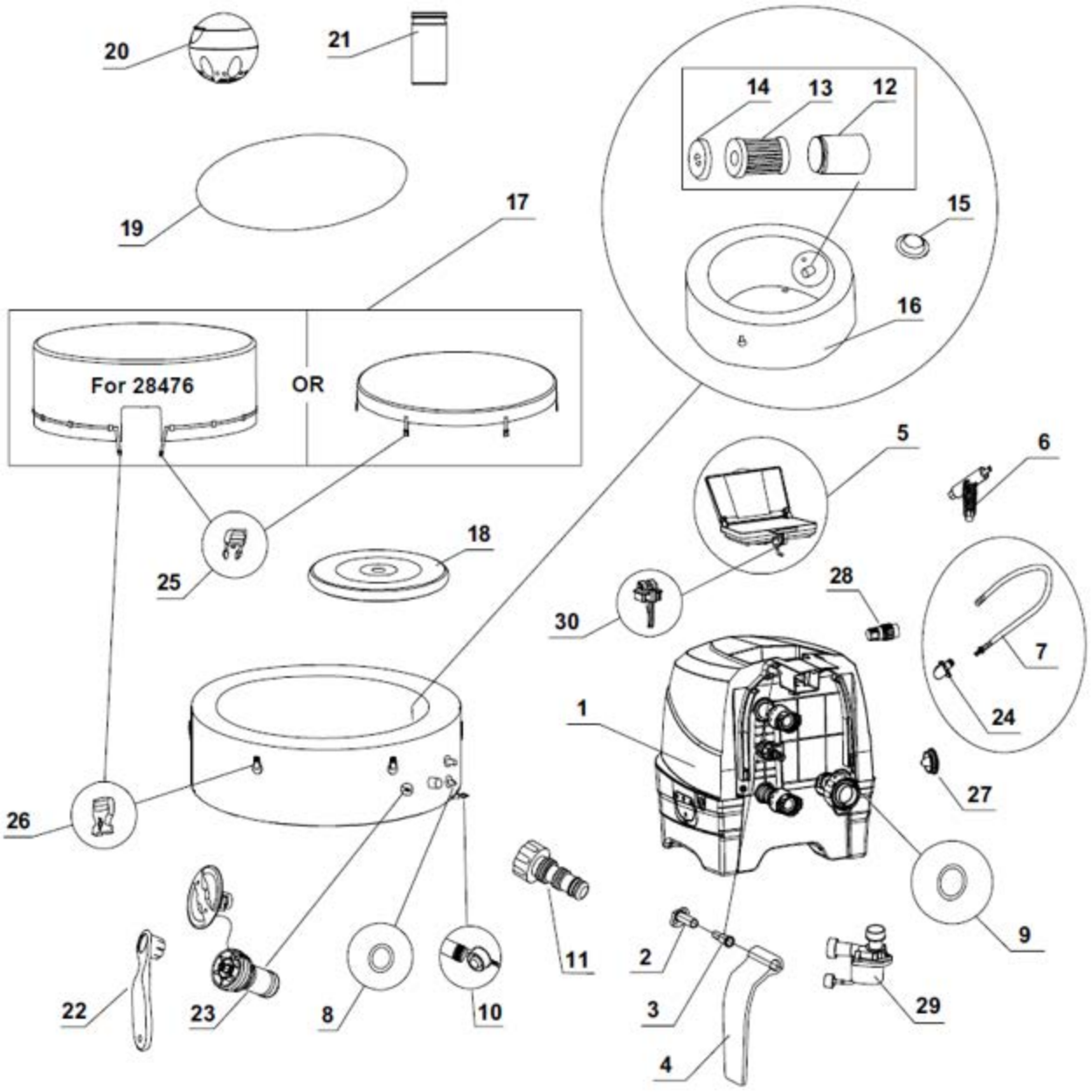
20
21
14
13
12
19
17
15
16
For 28476
OR
5
6
25
18
28
30
7
24
1
27
26
11
9
2
3
29
22
23
8
10
4